WIRE DESIGN

Fitting your new DIY cut and fit wire balustrade

You don't need specialist tools to install your wire balustrade, just a drill, wire cutters and an adjustable spanner (or a 5mm, a 9mm and an 11mm spanner).

The ball-end compression fitting allows you to adjust the length of your wires to suit. The mounting sockets can be attached to steelwork, woodwork or masonry using standard screws or bolts - no welding required! Best of all, we have made the kit from 316-grade stainless steel, meaning your balustrade will stay rust-free and bright for years to come!

Installing the balustrade sockets

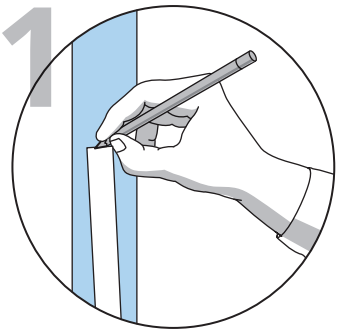

Measure up! Mark the positions of your mounting sockets on your post or wall.

TIP: For evenly spaced wires, divide the height of your post by the number of wires + 1

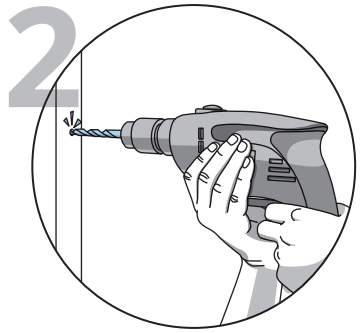

Drill your pilot holes.

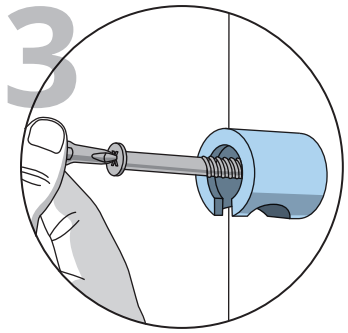

Now screw the mounting sockets into position using the stainless steel screw provided.

TIP: Hold the fitting lightly with a grip or pliers.

Installing the ball end fittings

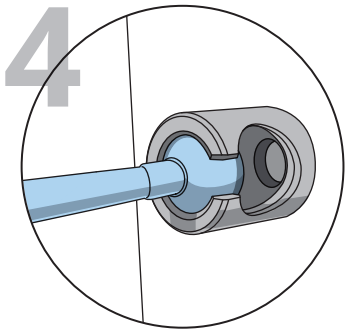

Clip the balls into the sockets at both ends of the balustrade.

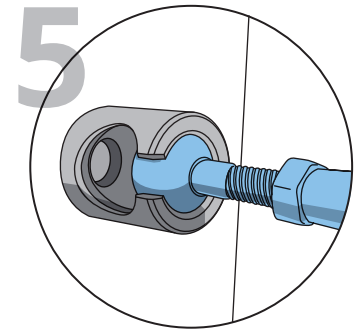

Leave about 1/3 of the thread exposed on the adjustable fitting - this is so you can adjust and tension the wire later.

Cutting the wire to fit

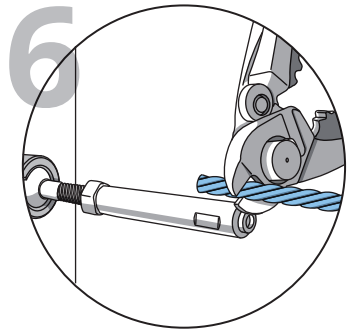

Firmly pull the wire up to the adjustable fitting. Mark the end of the fitting on the wire. Cut the wire.

TIP: Wrap the wire with tape to help prevent fraying.

Locking the wire in place

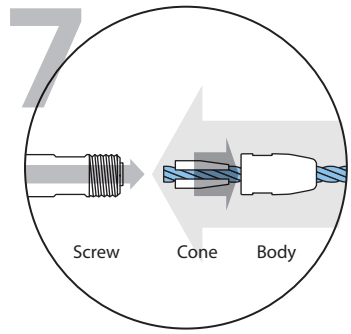

To fit the cut end of the wire to the adjustable fitting, place the body on the wire, then insert the cone into the body. With a spanner, screw the adjustable fitting into the body to lock the wire in place.

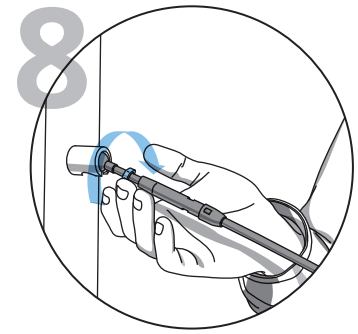

Lightly tighten the ball and wire fittings to hold them in place. You will need an adjustable spanner or a 9mm and an 11mm spanner.

TIP: Start tensioning from the longest wire. Work your way out from the middle of your balustrade to ensure even tensioning.

Finishing the installation

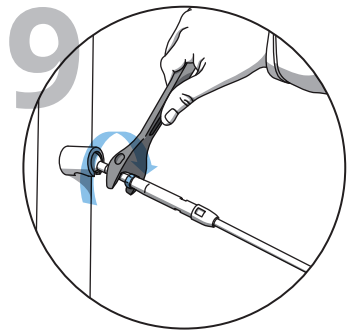

After fitting all the wires, tension each one with a spanner. You may need to re-tension the first wire at the end.

Congratulations! You have fitted your balustrade!

Wire Design is a trading name of Petersen Stainless Rigging Limited
Cowen Road, Blaydon on Tyne, Tyne and Wear, NE21 5TW | T: +44(0) 191 4140156 | E: sales@petersen-structural.co.uk
www.wire-design.co.uk